REVISIONS				
REV	DESCRIPTION	ECN	DATE	BY
1	INITIAL RELEASE	5569	9/17/2020	IR

NOTES:

1. DIMENSIONS IN INCHES
2. ALL TOLERANCES: ± 1/2"
3. ESTIMATED WEIGHT:
   DRY: 1200 LBS
   WET: 1220 LBS
5. AREA CLASSIFICATION: ORDINARY
6. AVAILABLE AMBIENT TEMPERATURE RANGE: -50°F - 120°F
7. RATINGS: CONFIGURABLE WITH TYPE 4/4X JUNCTION BOX FOR INDOOR OR OUTDOOR LOCATION
8. NOT ALL FEATURES ARE STANDARD

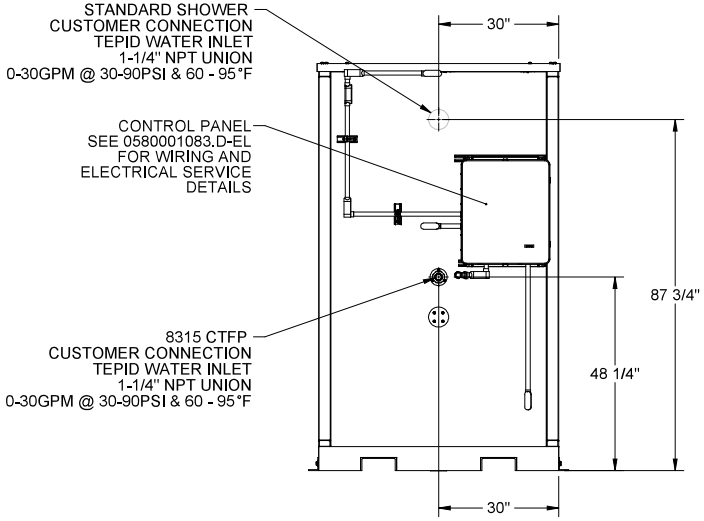

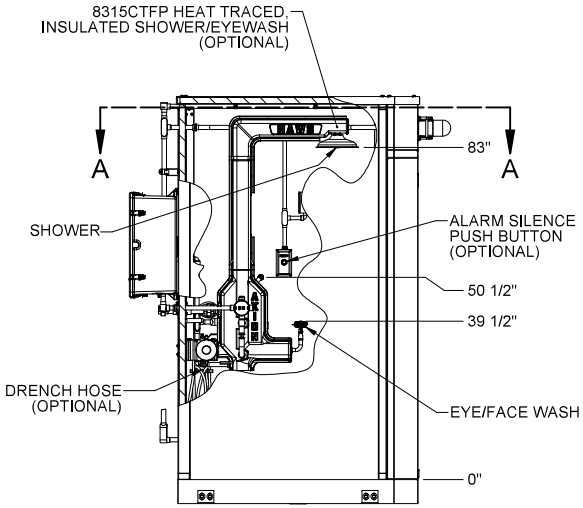

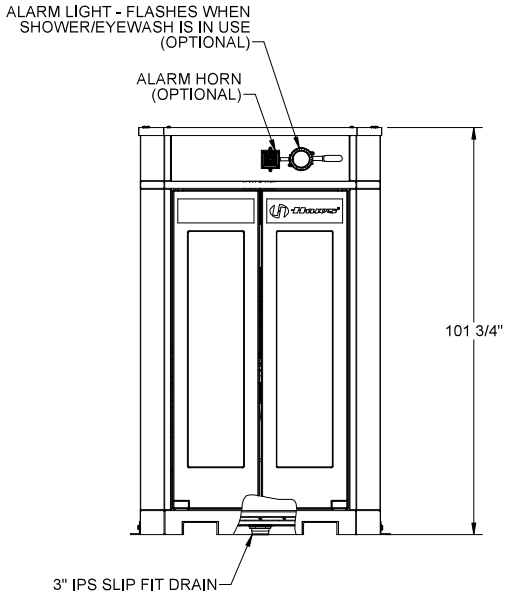

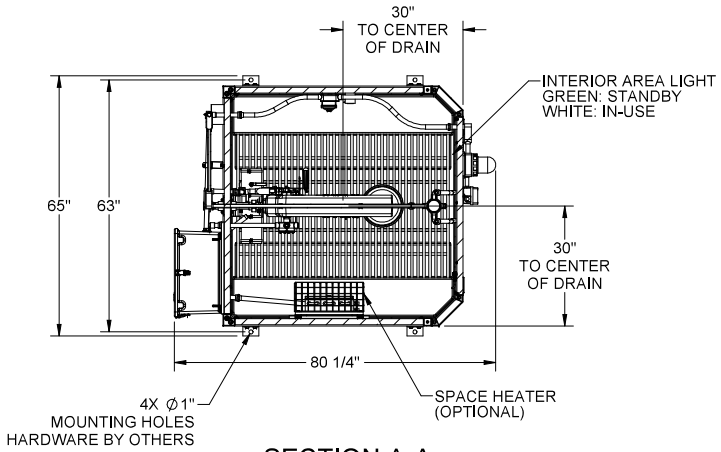

SECTION A-A

THE ATTACHED DESIGNS ARE CONSIDERED TRADE SECRETS AND POTENTIALLY PATENTABLE. IN ACCORDANCE WITH CONFIDENTIALITY AND NON-DISCLOSURE AGREEMENT, THESE DESIGNS IN ACTUAL OR CONCEPTUAL FORMS CANNOT BE DISCLOSED, REPRODUCED, OR USED WITHOUT HAWS' EXPRESS WRITTEN CONSENT.

CUSTOMER INFO/TAG #:	
JOB NUMBER:	
DRAWN BY:	
DRAWN DATE:	
CHECKED BY:	DB
CHECKED DATE:	09/22/20
APPROVED BY:	DB
APPROVAL DATE:	09/22/20

Haws® 1455 KLEPPE LANE SPARKS, NEVADA 89431 USA

TITLE
OUTDOOR HEATED SHOWER AND EYE/FACE WASH BOOTH

NOTICE OF PROPRIETARY INFORMATION
INFORMATION CONTAINED HEREIN IS THE SOLE PROPERTY OF HAWS CORPORATION AND THE DOCUMENTS RELATING THE DATA DISCLOSED HEREIN OR REPRESENTING THE DATA DISCLOSED HEREIN, NOT TO BE DISCLOSED IN WHOLE OR IN PART TO ANYONE WITHOUT THE PERMISSION OF HAWS CORPORATION.

THIRD ANGLE PROJECTION

SH 1 OF 1

SCALE	SIZE	PART NO.	REV.
1:24	C	0580001083.D-GA	1

© 2020 Haws Corporation - All Rights Reserved. HAWS® and other trademarks used in these materials are the exclusive property of Haws Corporation.